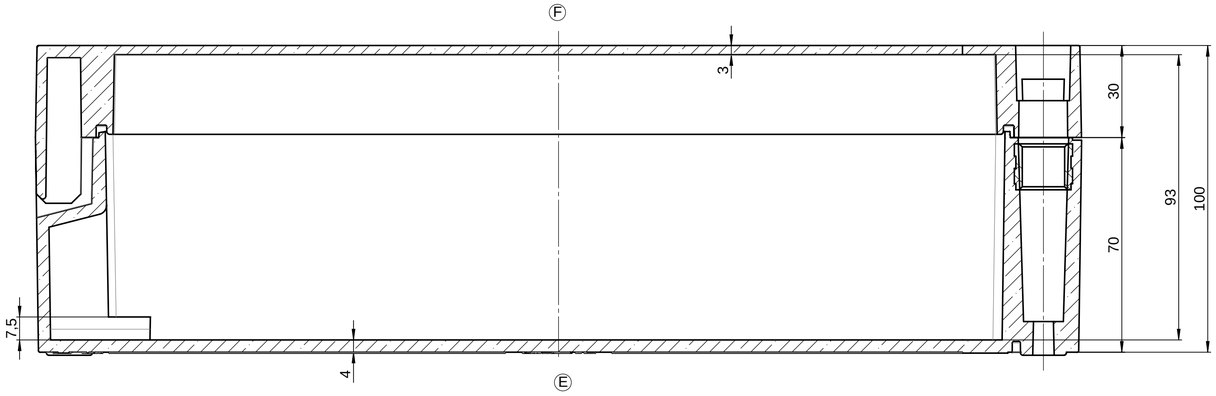

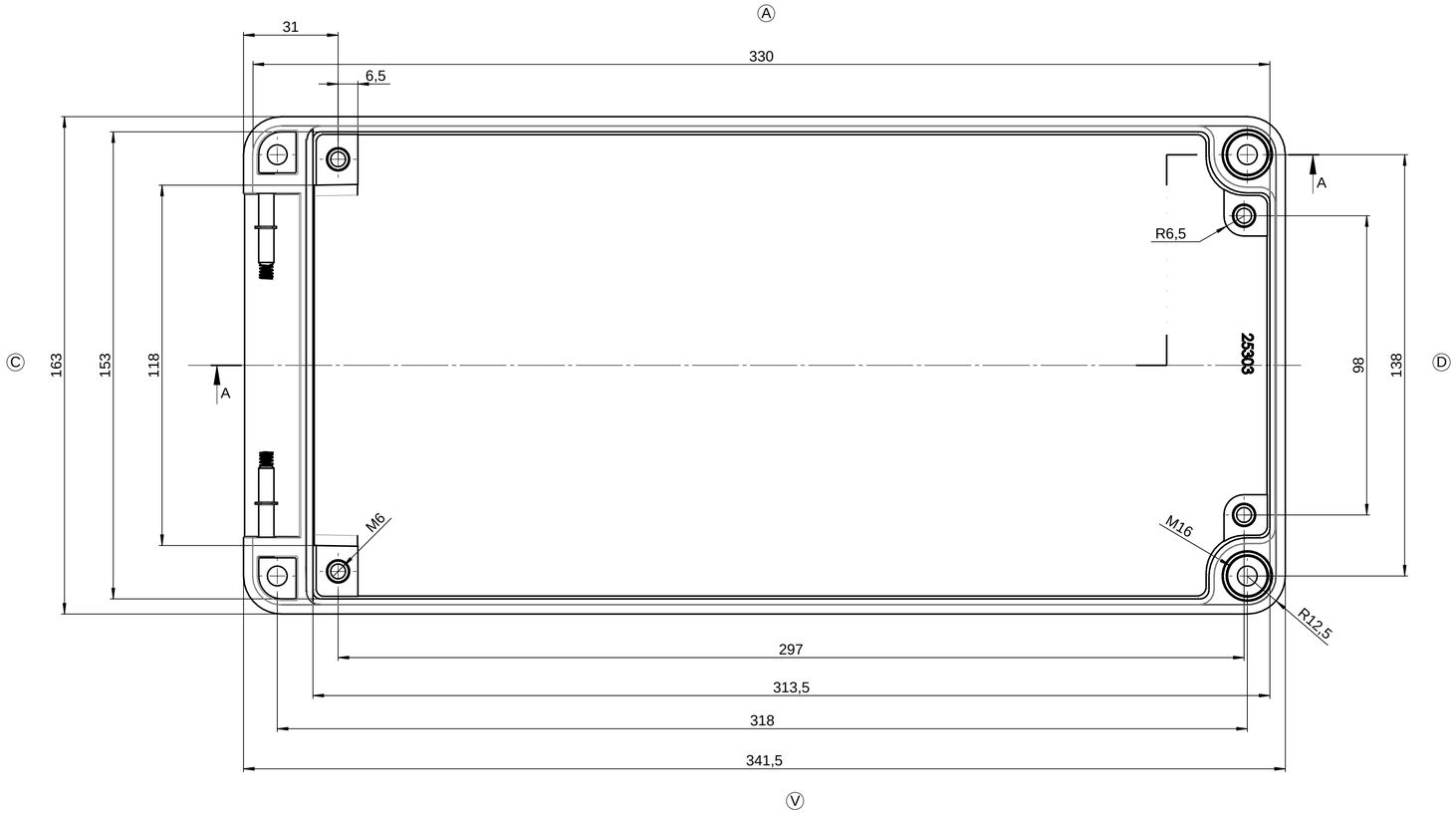

KAT21.163400